MMB-3 X 2-1/2

MANUAL BRASS MONITOR

NDD240

Approvals: UL, ULC

- Full 3" Waterway With Stream Straighteners
- Low Friction Loss
- Elevation And Rotation Locks For Unattended Operation
- No "Pinwheel" Effect
- Flows up to 1250 GPM (4800 LPM)

Description

The MMB-3 X 2-1/2 manually operated brass monitor provides unparalleled performance with simple, yet rugged, design features that provide ease of operation, minimum maintenance and resistance to normally destructive environments. They are suitable for use with all foam concentrate types in either salt or fresh water. MMB-3 X 2-1/2 Type Monitors are in active service from the Arctic Circle to the tropics and in marine applications, such as on-board tankers, oil rigs, docks and piers.

Features

- Cast brass construction for better corrosion resistance.
- Integrally cast straightener vanes in each elbow section to reduce waterway turbulence and friction loss.
- Full 3" waterway.
- Vertical & horizontal joints have internal brake band position locks.
- Suitable for operating pressures from 50 PSI to 250 PSI (3.5 Bar to 17.2 Bar).
- Swivel joints are ball bearing type equipped with O-ring seals to prevent water leakage.
- Monitor is designed to eliminate effects of nozzle thrust reaction.
- Full 360° continuous rotation.
- Angle of elevation is infinitely adjustable from 60° below horizontal to 90° above horizontal.

Applications

The MMB-3 X 2-1/2 manually operated brass monitors are commonly used for protection of flammable liquid storage tanks, dikes and loading racks. They can also be used in marine applications for tankers & chemical carriers as well as docks, piers and offshore platforms.

Specifications

The monitor shall be of a single waterway, cast design with integrally cast straightener vanes in each elbow section to reduce waterway turbulence and friction loss. All waterways shall be a full 3 inch (76.2mm) diameter and shall be capable of flowing a maximum of 1250 GPM (4800 LPM) with a pressure loss not exceeding 10.0 PSI (.69 Bar) at a flow of 800 GPM (3028 LPM). Monitor body shall be manufactured from cast brass [ASTM B585/C83600 (85-5-5-5)] to provide a rugged design requiring minimum maintenance and superior corrosion resistance to normally destructive environments. Monitor shall have a 3 inch 150 lb. ASA flat face inlet flange and the outlet shall be 2-1/2" NH (NST) male hose thread. The monitor shall have continuous rotational travel through 360°. Vertical elevation (up and down) travel shall be 90° above horizontal to 60° below horizontal with tapped holes provided to stop travel past 45° above and at 0° horizontal. Vertical and horizontal swivel joints shall incorporate an internal brake band position lock mechanism capable of holding position against a 95 foot-pound torque with a 50 inch pound torque applied to the position locking knob. Swivel joints shall be a single race type with brass ball bearings and Buna-N O-ring seals to prevent water leakage through the swivel, or dust, dirt and other foreign matter from entering the ball bearing race.

The nozzle thrust reaction shall travel through the vertical axis of the rotational joint and through the horizontal axis of the elevation joint, thus eliminating any "pinwheel" effects due to torque acting on the swivel joints.

Each monitor shall be supplied with a removable handle. Monitor unit shall be USCG Approved.

Approvals

- UL
- ULC

Technical Data

Materials of Construction:

Basic Monitor: .... Cast Brass, ASTM B585/C83600 (85-5-5-5)
Ball Bearings: ..... Brass ASTM B134
O-Rings: ..... Buna-N
Handle: ..... Brass ASTM B16
Misc. Hardware: ..... Brass ASTM B16, Stainless Steel ASTM A276

Connections:

Inlet: ..... 3"-150# ASA FF Flange
Discharge: ..... 2-1/2" MNH
Max. Flow: ..... 1250 GPM (4800 LPM)
Max. Operating Pressure: ..... 250 PSI (17.2 Bar)
Pressure Loss:
10.0 PSI @ 800 GPM (0.69 Bar @ 3028 LPM)
4.5 PSI @ 500 GPM (0.34 Bar @ 1893 LPM)
2.0 PSI @ 300 GPM (0.14 Bar @ 1136 LPM)
Finish: ..... Red polyurethane enamel paint
Weight: ..... 77 lbs. (35 Kg.)
Options: ..... NPSH hose threads

MMB-3 X 2-1/2

MANUAL BRASS MONITOR

NDD240

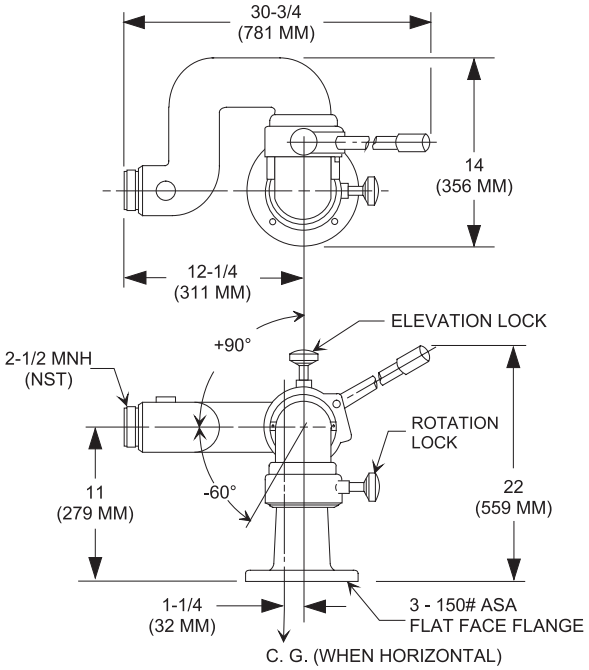

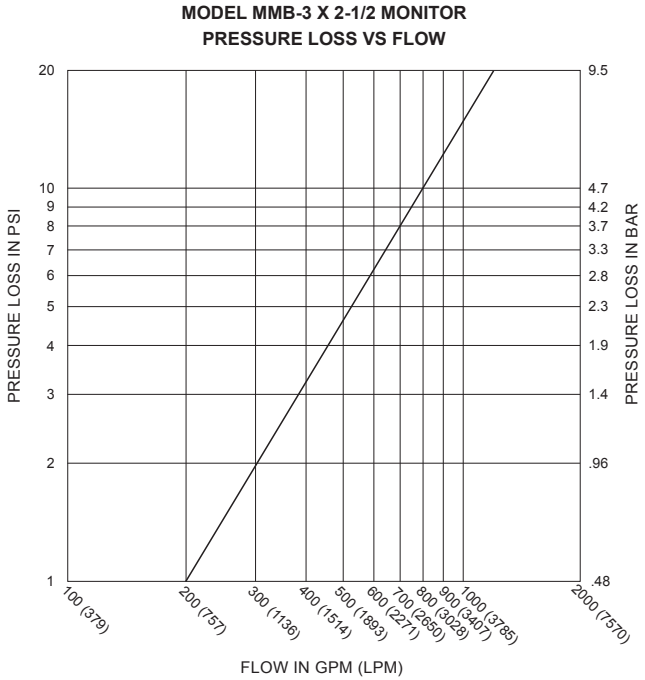

ORDERING INFORMATION			
Part Number	**Description**	**LBS**	**(Kg)**
1252-0001-9	MMB-3 X 2-1/2 Brass Monitor 2-1/2" MNH Discharge	77	(35)

National Foam
350 East Union Street, West Chester, PA 19382, USA
24hr **RED ALERT®** : 610-363-1400 • Fax: 610-431-7084
www.nationalfoam.com

National Foam operates a continuous program of product development. The right is therefore reserved to modify any specification without prior notice and National Foam should be contacted to ensure that the current issues of all technical data sheets are used.
© National Foam