NF120
MOBILE FOAM UNIT
32 GALLON
NPR415

- Self-Contained Mobile Foam Unit
- Rapid Deployment of Foam Extinguishing Agent
- Improved Handling and Mobility
- Low Maintenance
- Eductor and Nozzle UL Listed with Universal®F3 Green 3%-3%

Description

The innovatively designed National Foam NF120 is a fully self-contained mobile foam unit which has been specifically developed for the rapid deployment of foam extinguishing agent to fires and chemical spills. Further refinement has been achieved through a detailed ergonomic review and lower center of gravity design, resulting in improved handling and mobility.

Requiring only connection to a suitable water supply, the standard unit comprises a 32 gal (120 litre) foam concentrate tank, Angus Fire Hi-Combat UNI-225 eductor and F225/HU low expansion foam nozzle. Also two 50 ft (15m) lengths of dutch coiled 1-3/4" in (45mm) diameter Duraline fire hose, fitted with 2-1/2" NH couplings (other connections available to special order). A shut off ball valve is also fitted to the eductor as standard, to facilitate swift operation by just one person.

This improved performance combined with an effective fire fighting capability makes the National Foam NF120 ideal for the protection of smaller flammable liquid hazards such as boiler rooms, oil storage and loading terminals, paint or spirit stores, airfields, industrial sites, generator rooms and similar high risk areas. The NF120 provides a compact and highly efficient fire fighting unit, on hand for a fast response with minimum manpower requirements.

This highly versatile unit is suitable for use with any type of foam concentrate, but is particularly effective when used with Universal Green®F3 Synthetic Fluorine Free foam Concentrate.

The ability to use National Foam JS-10 foam nozzle or Angus Hi-Combat MEX225U and MEX450U medium expansion foam nozzles with this unit, makes it particularly suitable for rapid intervention in cases where vapor suppression of chemical spills is a necessity.

All component parts and materials have been chosen to minimize maintenance requirements. The foam tank is constructed from high strength, chemical-resistant GRP resin and is mounted on a corrosion resistant, thermoplastic coated steel chassis. A footbrake is also provided for maximum stability on a slope.

Features

- One-man operation
- Suitable for use with all foam concentrates
- Air aspirating nozzle provides 60 GPM @ 100 psi (227 lpm @ 7.0 bar)
- Can be refilled during operation
- Eductor inlet shutoff valve
- Each unit provided with discharge hose and foam nozzle
- Break for stability on a slope

Applications

Ideal for refining areas, docks, warehouses, aircraft hangars, offshore platforms, industrial process areas, laboratories, and truck loading racks.

Technical Specifications

The National Foam NF-120 is a complete self-contained proportioning system consisting of a storage tank, line proportioner, discharge hose, and nozzle. The storage tank is manufactured from UV stabilized resin and is chemically resistant with a capacity of 32 gal. (120 L). The foam tank frame is powder coated black and incorporates 4 point stability with anti-rollover bumper. Wheels are solid rubber, mounted on a steel axle. Eductors are available in several varieties. Hose connections on the line eductor and nozzle can be either 1-1/2" NH or NPSH. A capped fill connection is installed on the top of the tank with a securing chain. A vertical, translucent section of the storage tank is provided to allow the operator to determine the amount of foam in the storage tank. Tank and piping have a red polyurethane gloss finish.

The NF120 comes with complete with (2) 50 ft (15m) lengths of dutch coiled 1-3/4" (45mm) diameter Duraline fire hose, fitted with light alloy 2-1/2" NH couplings.

NF120
MOBILE FOAM UNIT
32 GALLON
NPR415

The NF120 comes complete with a Hi-Combat UNI-225 eductor with ball shutoff valve and F225/HU low expansion aspirated foam nozzle. One length of hose is stored in a recess on each side of the storage tank. An operating Instruction Plate is permanently mounted on tank.

Approvals

- F225/HU Nozzle - UL Listed
- UNI-225 Eductor - UL Listed

Technical Information

Foam Concentrate Capacity..... 32 gal (120.0 L)

Foam Tank.....UV Stabilized GRP Resin Chemical Resistant

Chassis..... Thermoplastic Coated Steel

Dimensions (Assembled):....48 x 24 x 37 (1215mm x 600mm x 940mm)

Inlet Pressure:..... 165 psi (11.3 bar)

F225/HU Noz Flow: ....60 gpm (227 lpm) @ 100 psi (7.0 bar)

Discharge Hose: (2)1-3/4" in (45mm) x 50 ft (15m) of Hose w/ 2-1/2" NH or NPSH cplgs

Water Inlet:.....2-1/2" NH or NPSH Female Swivel

Material of Construction:

Tank..... Fiberglass

Nozzle .....Light Alloy

Tires .....Solid Rubber

Handle .....Welded Tubular Steel

Eductor.....Light Alloy

Finish:

Tank.....Red Polyurethane Gloss

Frame Handle.....Black Epoxy

Weight:

Empty ..... 143 lb (65 kg)

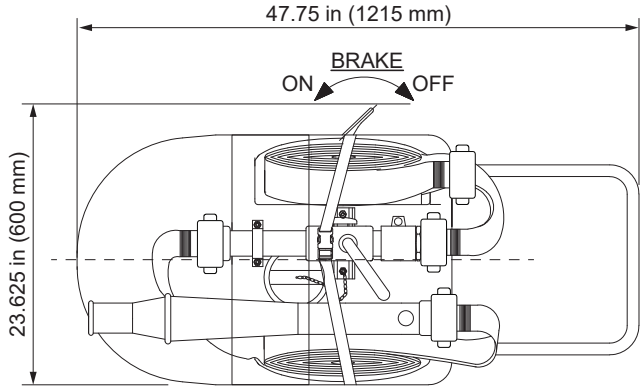

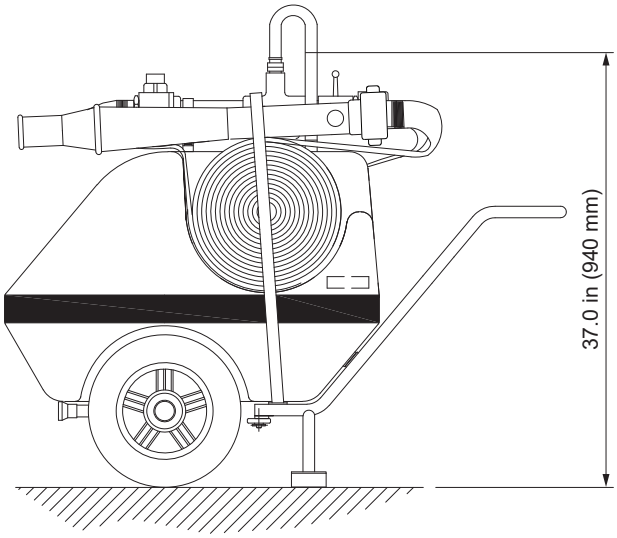

ORDERING INFORMATION

Model Number	Part Number	Description
NF-120-3% NH	1282-7046-4	Wheeled Mobile Foam, Unit, 32 gal, 2-1/2 NH Swivel Inlet w/ 2 x 50' 1-3/4" Collapsible Hose and Angus Fire Hi-Combat F225/HU Low Expansion Aspirated Foam Nozzle
NF-120-3% NPSH	1282-7046-5	Wheeled Mobile Foam , Unit, 32 gal, 2-1/2 NPSH Swivel Inlet w/ 2 x 50' 1-3/4" Collapsible Hose and Angus Fire Hi-Combat UF225/HU Low Expansion Aspirated Foam Nozzle

National Foam
350 East Union Street, West Chester, PA 19382, USA
24hr **RED ALERT®** : 610-363-1400 • Fax: 610-524-9073
www.nationalfoam.com

National Foam operates a continuous program of product development. The right is therefore reserved to modify any specification without prior notice and National Foam should be contacted to ensure that the current issues of all technical data sheets are used.
© National Foam